ZEBCO CARDINAL 6X™ - 7X™

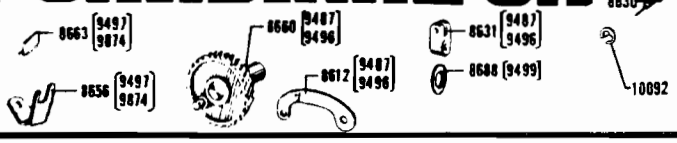

8630 Holder for 8612

10092 Retainer Clip

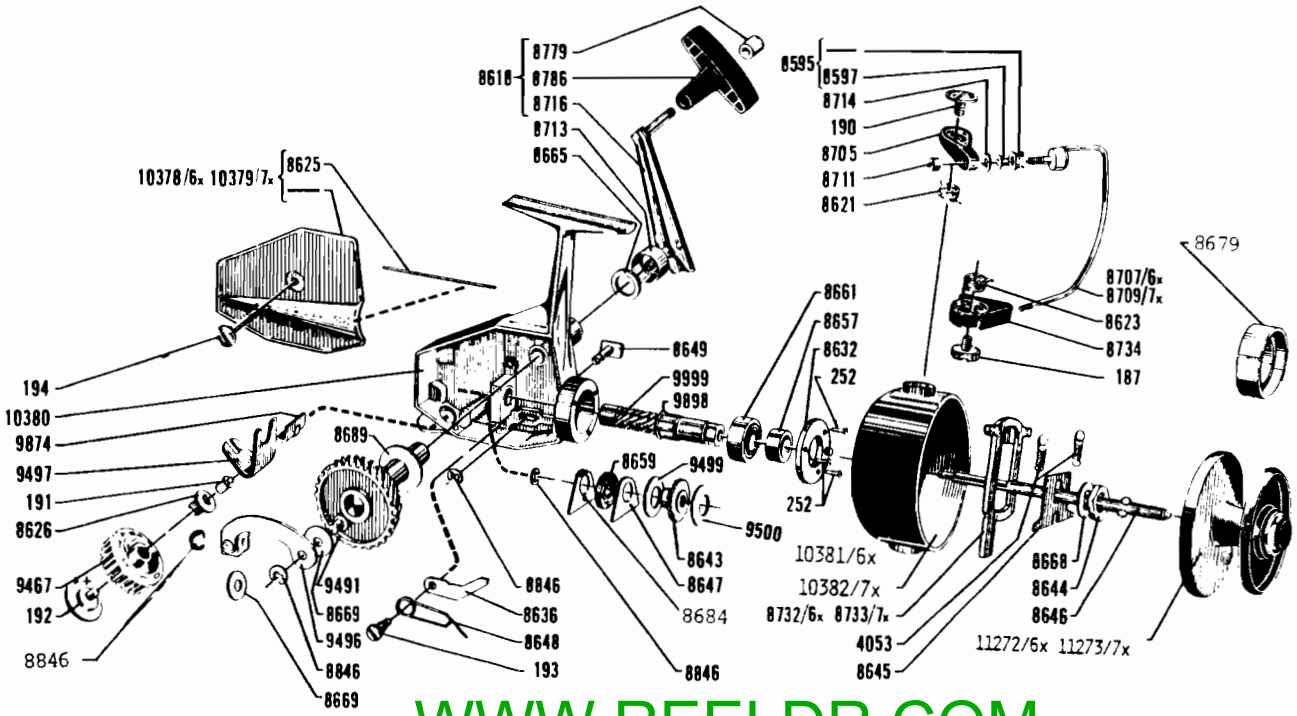

WWW.REELDR.COM

Part No.	Description
187	Screw
190	Screw for Bail Arm
191	Screw f/Brake Argmt.
192	Screw for Brake Nut
193	Dist.Screw/Anti-Rev.Hook
194	Screw for Housing Plate
252	Screw
4053	Spring for Bail Stopper
8595	Line Roller & Bushing
8618	Crank Complete
8621	Bail Sprng, Right
8623	Bail Spring, Left
8625	Click Spring
8626	Cashing
8632	Ball Bearing Holder
8636	Anti-Reverse Hook
8643	Click Washer
8644	Winding Cup Nut
8645	Driving Washer
8646	Main Shaft
8647	Friction Washer
8648	Stop Spring
8649	Anti-Reverse Button
8657	Distance Tube
8659	Locking Washer
8661	Ball Bearing
8665	Felt Backing
8668	Locking Washer
8669	Washer
8684	Spring Friction Washer

Part No.		Description
8679		Arbor for Spool
8689		Spring Washer
8705		Bail Arm
8707	6X	Bail
8709	7X	Bail
8711		Nut for Bail
8713		Protecting Ring
8714		Protecting Washer
8716		Crank Arm
8732	6X	Bail Stopper
8733	7X	Bail Stopper
8734		Bail Plate
8779		Nut
8786		Handle Knob
8846		Locking Washer
9467		Brake Nut
9491		Main Gear
9496		Connecting Link
9497		Brake Arm
9499		Friction Washer
9500		Washer
9874		Insert Support
9898		O-Ring
9999		Shaft for Worm Gear
10378	6X	Housing Plate
10379	7X	Housing Plate
10380		Housing
10381	6X	Winding Cup
10382	7X	Winding Cup
11272	6X	Spool
11273	7X	Spool

PLEASE ORDER BY PART NUMBER