garcia MITCHELL 402-403

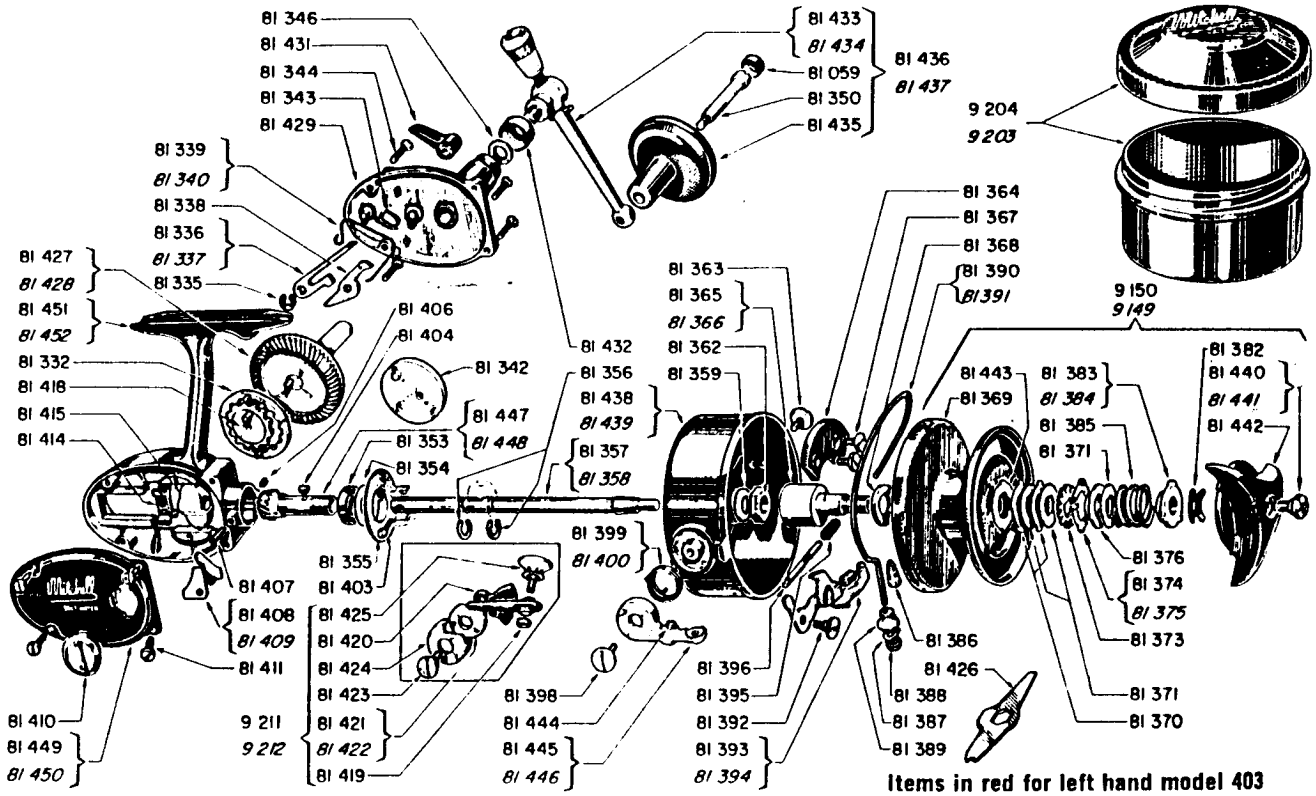

Items in red for left hand model 403

Prices subject to change without notice

***Replaces 81332 and 81418 to convert planamatic gearing to crosswind**

Please specify both the reel model and part numbers when ordering.

No.	Part Name	Price
9149	Spool Complete, less container (403)	8.25
9150	Spool Complete, less container (402)	8.25
9203	Spool Container (403) (9149)	1.10
9204	Spool Container (402) (9150)	1.10
9211	Manual Pick Up Complete (402)	4.50
9212	Manual Pick Up Complete (403)	4.50
9232	Combination Tool	1.75
81059 (107)	Knob Lube Port	.10
81332 (44)	Planamatic Cam Ring	.50
81335 (48)	Cam "C" Lock	.10
81336 (46)	Anti Reverse Dog Cam (402)	.15
81337 (46L)	Anti Reverse Dog Cam (403)	.15
81338 (45)	Anti Reverse Dog	.25
81339 (47)	Anti Reverse Dog Spring (402)	.15
81340 (47L)	Anti Reverse Dog Spring (403)	.15
*81342 (58)	Crosswind Cam	.40
81343 (55)	Anti Reverse Lever Cam	.25
81344 (41)	Cover Plate Screw (ea.)	.10
81346 (49A)	Handle Spacer	.10
81350 (49C)	Handle Knob Screw	.50
81353 (32)	Ball Bearing	4.00
81354 (31)	Ball Bearing Shield	.10
81355 (30)	Bushing	.15
81356 (27)	Slide "C" Lock (ea.)	.10
81357 (25)	Axle (402)	1.75
81358 (25L)	Axle (403)	1.75
81359 (62)	Hex Nut Lock Washer	.15
81362 (20)	Hex Nut	.25
81363 (13)	Bail Screw No. 2	.25
81364 (66)	Counterweight	.40
81365 (11)	Spindle (402) (9150)	1.00
81366 (11L)	Spindle (403) (9149)	1.00
81367 (67)	Counterweight Screw (ea.)	.10
81368 (10)	Drag Washer	.10
81369 (9)	Spool Shell	4.25
81370 (8B)	Keyed Drag Disk (ea.)	.20
81371 (8A)	Drag Disk (ea.)	.20
81373 (7C)	Ratchet	.20
81374 (7B)	Click Spring (402) (9150)	.40
81375 (7BL)	Click Spring (403) (9149)	.40
81376 (7A)	Collared Spacer	.20
81382 (3)	Spring Washer	.20
81383 (4)	Wing Nut (402) (9150)	.50
81384 (4L)	Wing Nut (403) (9149)	.50
81385 (6)	Coil Spring	.25
81386 (51)	Bail Wire Cone	.45
81387 (16A)	Bail Wire Lock Washer	.10
81388 (16)	Bail Wire Lock Nut	.20
81389 (15)	Line Guide	.45
81390 (14)	Bail Wire (402)	1.25
81391 (14L)	Bail Wire (403)	1.25
81392 (24)	Trip Lever Screw	.15
81393 (21)	Trip Lever (402)	.75
81394 (21L)	Trip Lever (403)	.75
81395 (23)	Bail Release Spring	.10
81396 (22)	Bail Release Pin	.20
81398 (12)	Bail Screw No. 1	.25
81399 (18)	Bail Spring (402)	.15
81400 (18L)	Bail Spring (403)	.15
81403 (29)	Oscillation Guide Screw	.10
81404 (33)	Key	.10
81406 (35)	Set Screw No. 2	.10
81407 (34)	Set Screw No. 1	.10
81408 (53)	Anti Inertia Brake (402)	.15
81409 (53L)	Anti Inertia Brake (403)	.15
81410 (38)	Lube Port Cover	.25
81411 (39)	Side Plate Screw (ea.)	.10
81414 (28)	Oscillation Guide	.35
81415 (26)	Oscillation Slide	.65
81418 (43)	Planamatic Gear	.45
81419 (92)	Line Guide Lock Nut	.10
81420 (95)	Manual Counterweight	.25
81421 (90)	Manual Pick Up Mount (402)	.75
81422 (90L)	Manual Pick Up Mount (403)	.75
81423 (94)	Manual Lock Screw	.25
81424 (93)	Manual Mount Lock	.25
81425 (91)	Manual Roller Guide	2.25
81426 (56)	Utility Tool	.25
81427 (129)	Drive Gear (402)	5.50
81428 (129L)	Drive Gear (403)	5.50
81429 (128)	Coverplate	3.50
81431 (134)	Anti Reverse Lever	.25
81432 (140)	Dust Shield	.25
81433 (130)	Handle Shank (402)	3.50
81434 (130L)	Handle Shank (403)	3.50
81435 (131)	Handle Knob	2.00
81436 (132)	Handle, Complete (402)	6.50
81437 (132L)	Handle, Complete (403)	6.50
81438 (124)	Rotating Head (402)	5.00
81439 (124L)	Rotating Head (403)	5.00
81440 (1)	Drag Assembly Screw (402) (9150)	.25
81441 (1L)	Drag Assembly Screw (403) (9149)	.25
81442 (120)	Drag Adjusting Knob	.50
81443 (122)	Teflon Drag Washer	.20
81444 (123)	Bail Bumper	.10
81445 (121)	Bail Wire Mount (402)	1.60
81446 (121L)	Bail Wire Mount (403)	1.60
81447 (133)	Pinion Gear (402)	2.50
81448 (133L)	Pinion Gear (403)	2.50
81449 (127)	Side Plate (402)	1.25
81450 (127L)	Side Plate (403)	1.25
81451 (126)	Housing (402)	6.00
81452 (126L)	Housing (403)	6.00

PARTS AND SERVICE AVAILABLE AT THE FOLLOWING REGIONAL FACTORY REPAIR DEPOT

REEL SERVICE AND PARTS

NATE BUELL SERVICE CORPORATION
5013 N. E. 42nd STREET
PORTLAND, OREGON 97218

SHERMAN LOYD SALES COMPANY
4737 GREENVILLE AVENUE
DALLAS, TEXAS 75206

HARRY C. MILLER CO., INC.
257 PARK AVENUE SOUTH
NEW YORK, NEW YORK 10010

RODS, REELS AND PARTS SERVICE

THE GARCIA SERVICE DEPARTMENT
329 ALFRED AVENUE
TEANECK, NEW JERSEY 07666

THE CONDLON CORPORATION
1111 EAST McFADDEN STREET
SANTA ANA, CALIFORNIA 92705

SILICOTE SALES DIVISION
520 WEST 14th AVENUE
OSHKOSH, WISCONSIN 54902

J. K. CLARK COMPANY
ACO SPORTSMEN SERVICE
13501 VAN DYKE
DETROIT, MICHIGAN 48234